# INSTALLATION INSTRUCTIONS

## 34/1000 BOX PROFILE — FORWARD AND REVERSE

**Applies to** Briarwood 34/1000 box profile, Forward and Reverse, in PVC Plastisol and Polyester

How to lay Briarwood 34/1000 box profile sheets: the order of laying, the laps, the fixings and the edges. Storage, cutting, thermal movement and cleaning each have their own Briarwood note.

## 1. Safety

- Two people to a sheet, always. A sheet is sharp along every edge, flexible along its length and a sail in any wind.
- Clean gloves with a grip. No watches, buckles or loose tools against the coated face.
- Stop sheeting in high or gusting wind. A sheet that lifts at height cannot be got back.
- Never walk on an unfixed sheet, and never on the side lap crown of a fixed one. Use load-spreading boards on the roof, during the job and at every visit after it.

## 2. Before you lay

A profiled sheet is stiff along its length. It will not straighten a structure that is out of line; it will follow it, and every sheet after it will follow the first.

1. Check the purlins or rails are in plane, at the centres the design calls for, and square to the eaves and the ridge. Correct the structure first. Do not try to pull it straight with the sheets.
2. Establish the prevailing wind for the site. It decides which corner you start in.
3. Check the delivery against the delivery note for configuration, colour, gauge and length before anything goes up. A wrong length is cheap to resolve on the lorry and expensive on the purlins.

## 3. The order of laying

Lay from the eaves upward, one full run at a time, starting in the corner furthest from the prevailing wind and working towards it. Every side lap then faces away from the weather, and driven rain runs over the joint, not into it.

1. Set the first sheet at the eaves, in the corner away from the wind, and square to the eaves line. Check it before it is fixed with more than the minimum needed to hold it.
2. Lay the sheet above it to complete the run, with the end lap falling on a purlin.
3. Start the next run beside the first, side lapping it by one full corrugation, eaves sheet first again.
4. Continue across the roof run by run. Check cover every third or fourth run against what it should be, and correct a drift while it is still a few millimetres.

> **THE FIRST SHEET DECIDES THE WHOLE ROOF**
> If the first sheet is not square to the eaves, every sheet after it inherits the error and each has to be pulled a little further than the last. The run finishes with a sawtooth along the eaves line, and the only cure is to take the sheets back off.

A run of one sheet from eaves to ridge has no end lap and is laid in the same order. Ridge flashings are laid from the same end as the sheets, for the same reason.

## The order of laying

34/1000 box profile, forward (over purlin)
PVC Plastisol, Polyester

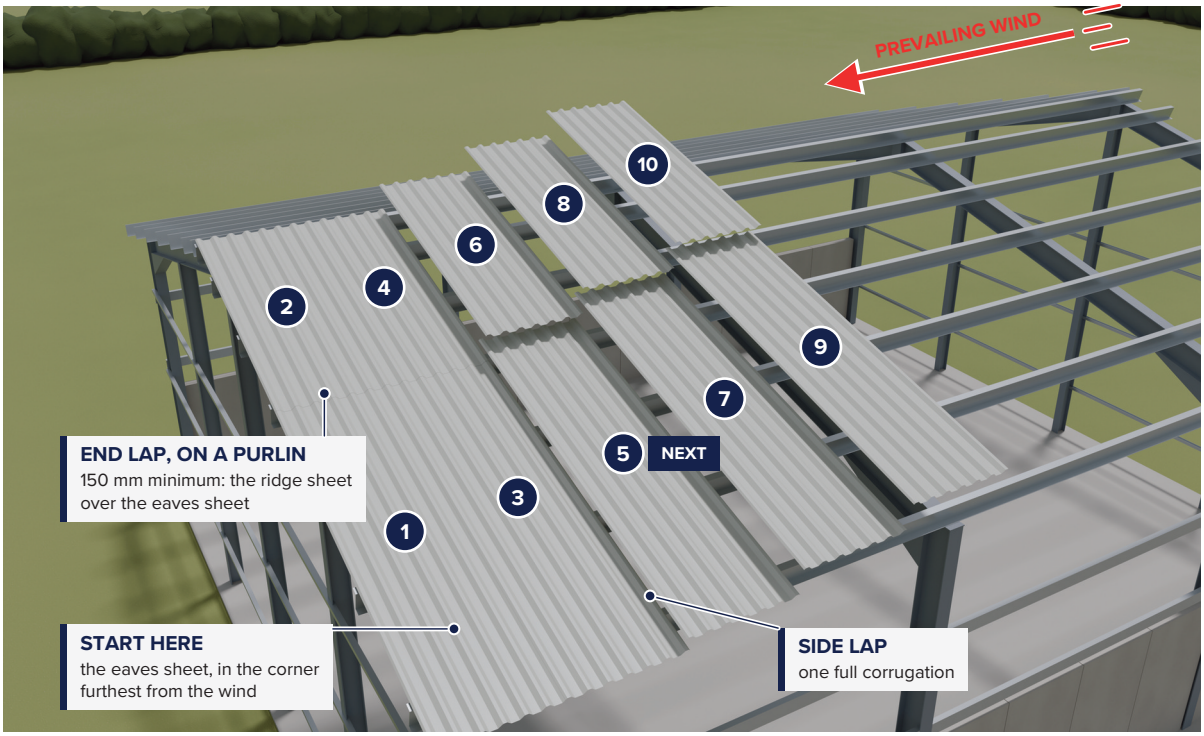


**Lay from the eaves upward, one full run at a time.**
A part-laid roof, sheets numbered in the order they go on: the eaves sheet of each run first, the sheet above it second, starting in the corner furthest from the prevailing wind. The sheets not yet fixed are shown lifted over the place they go, the next one lowest.

## Square the first sheet: the eaves close up

34/1000 box profile, forward (over purlin)
PVC Plastisol, Polyester

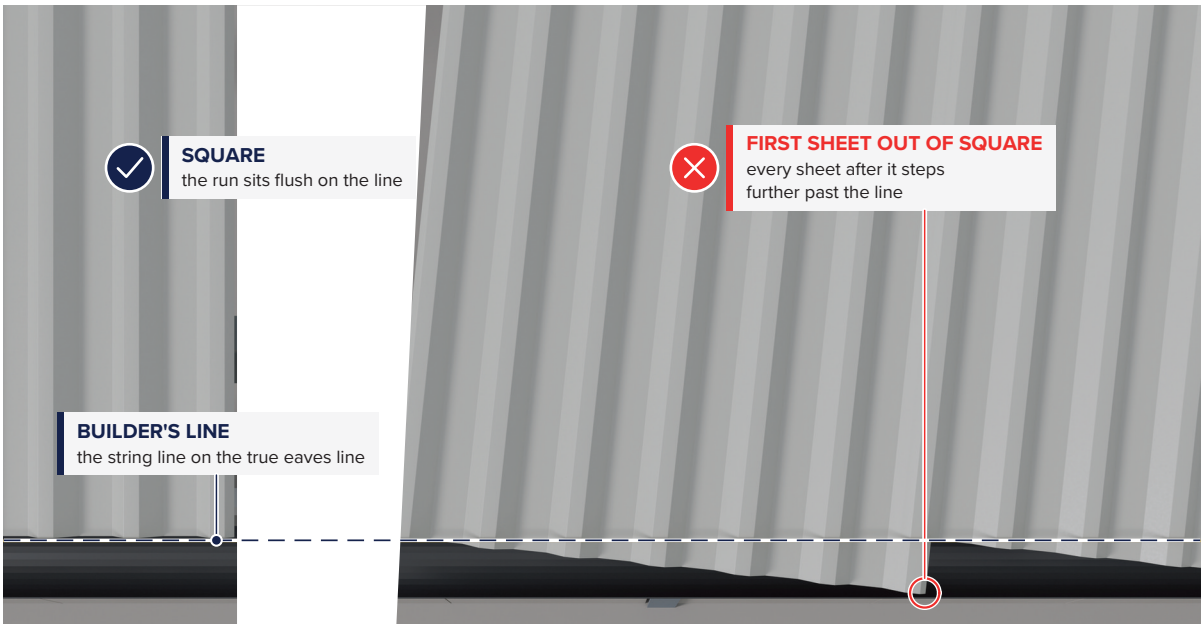


**Set the first sheet square to the eaves: everything laid after it follows it.**
Left, the first sheet set square: the run sits flush on the string line at the eaves. Right, the first sheet out of square: the run leans and every sheet steps further past the line.

The error is exaggerated to 6 degrees so it reads at print size.

## 4. Laps

Side lap by one full corrugation, crown on crown, and lay so the exposed edge of each lap faces away from the prevailing wind. Stitch every side lap as section 5 sets out.

### Side lap

34/1000 box profile, forward (over purlin)
PVC Plastisol, Polyester

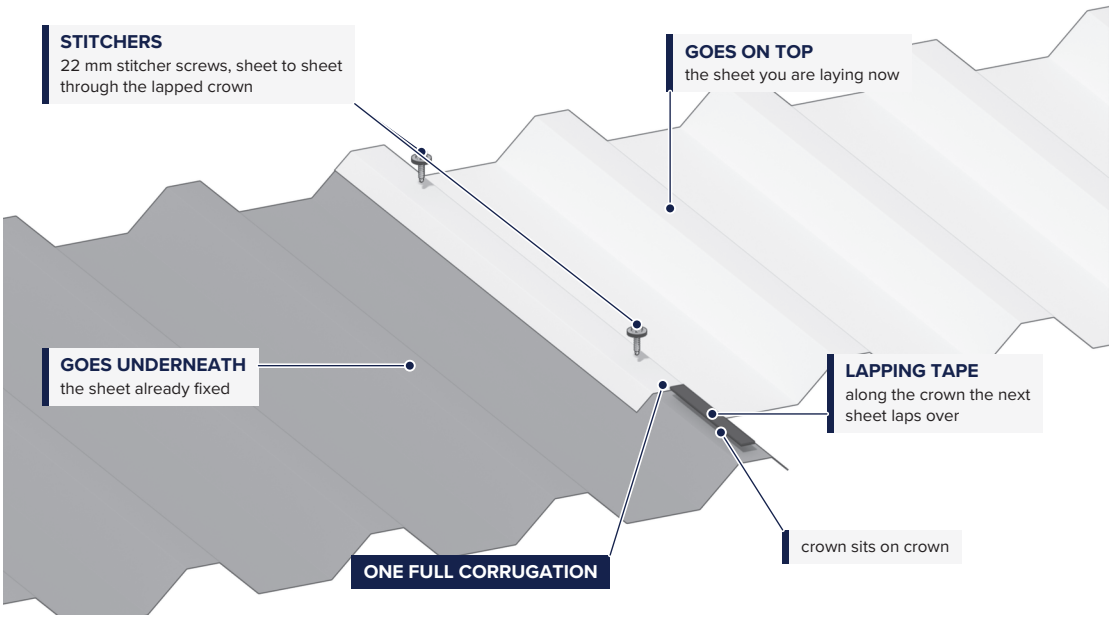


**The new sheet laps the last one by one whole corrugation.**
Its edge crown sits directly over the edge crown already fixed. Never in a pan, never half a crown across. Tape the crown before the next sheet goes over it, then stitch the lap through the lapped crown.

The stitchers are shown above where they go, before they are driven. The tape is drawn lifted slightly clear of the sheet so it reads as a separate part.

### Side lap across a run

34/1000 box profile, forward (over purlin)
PVC Plastisol, Polyester

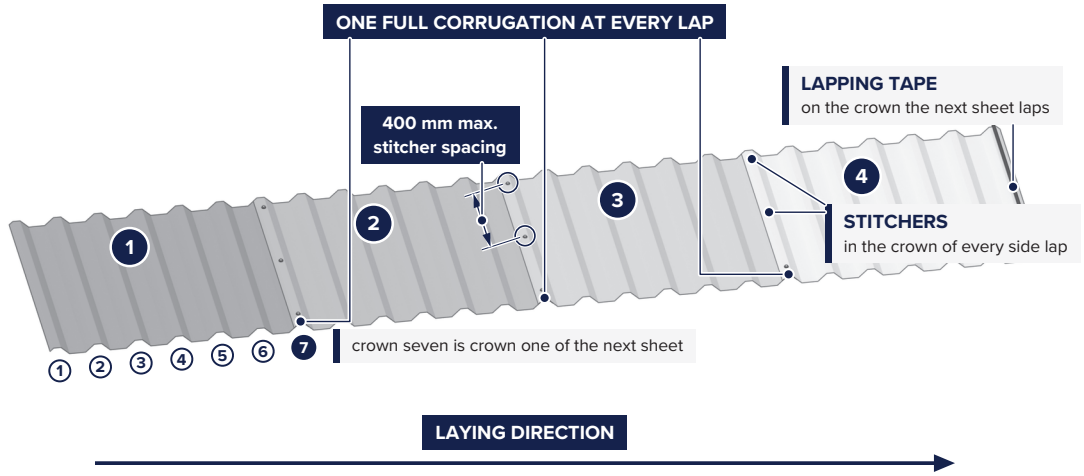


**Seven crowns to a sheet, and the last one is shared.**
Count crowns, not sheets: crown seven of the sheet you have just fixed becomes crown one of the next. Four sheets cover four times the cover width, not four times the sheet width. Every side lap is taped and stitched through its crown.

The tape is drawn lifted slightly clear of the sheet so it reads as a separate part.

Lay lapping tape in every side lap and every end lap. At an end lap the tape is one strip on the fixing line, and the fixing passes through it.

## Lapping tape: side laps and end laps

34/1000 box profile, forward (over purlin)
PVC Plastisol, Polyester

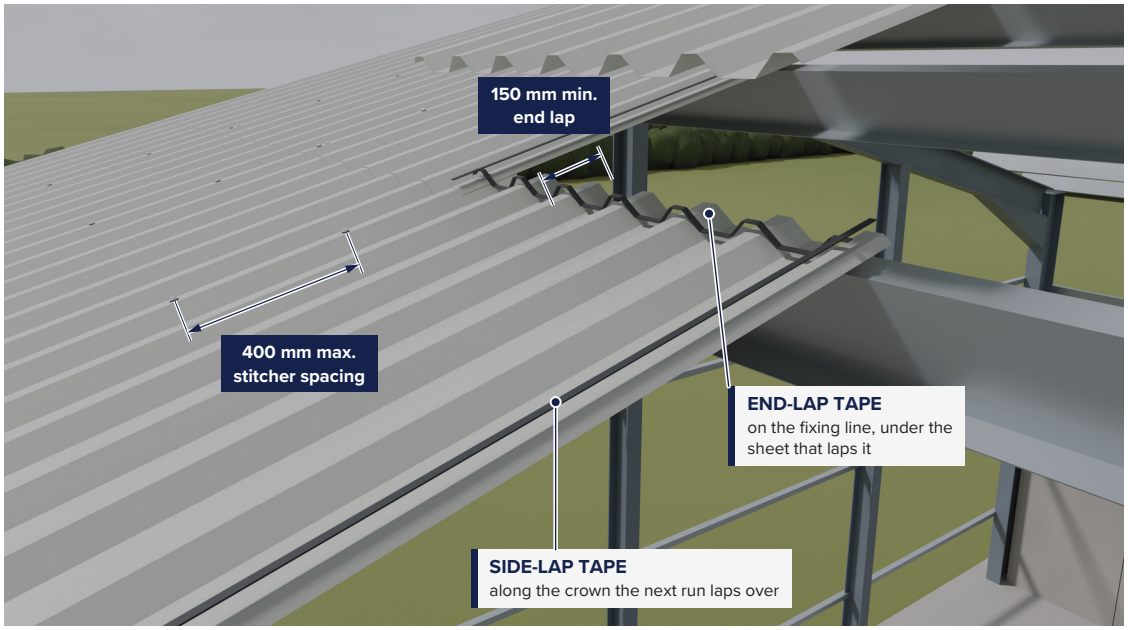


**Tape every side lap and every end lap before the next sheet goes over it.**
End-lap tape is one strip on the fixing line, the fixing passes through it, under the sheet that laps it; side-lap tape runs along the crown the next run laps over. The sheets that will cover the tape are shown lifted clear of it.

The tape is drawn lifted slightly clear of the sheet so it reads as a separate part.

Make every end lap on a purlin, the higher sheet over the lower, with a minimum lap of 150 mm, fixed through both sheets. Every end lap takes at least 150 mm out of the sheet length, so allow for it when the sheets are measured and ordered: length is fixed when the sheets are made.

## End lap on a purlin

34/1000 box profile, forward (over purlin)
PVC Plastisol, Polyester

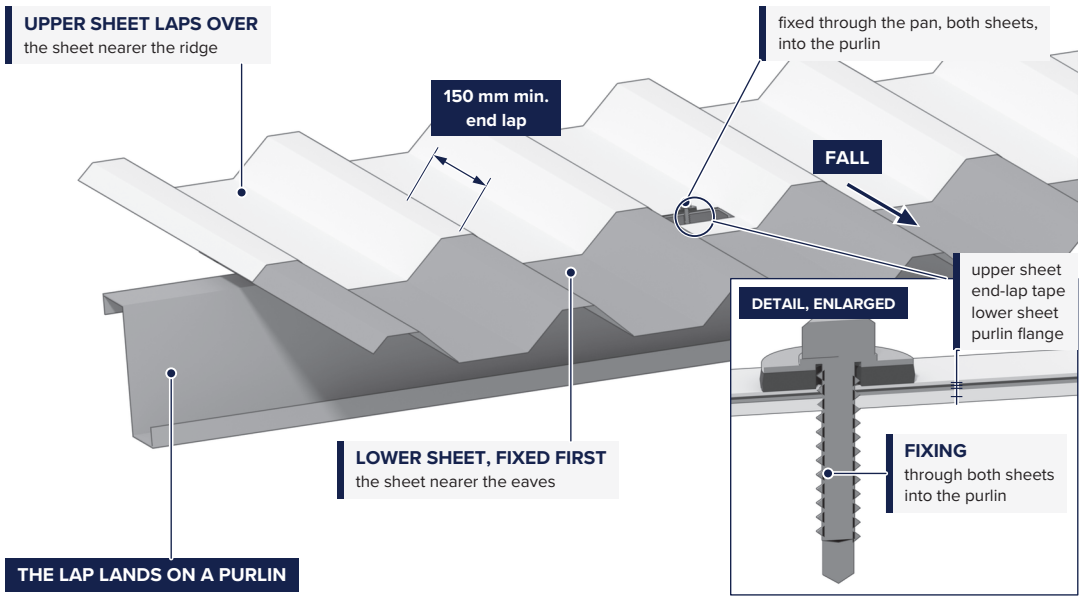


**Sheets go on from the eaves upward, so every end lap sheds downhill.**
The sheet nearer the ridge always laps over the one below it. Make the lap on a purlin and fix through both sheets. Lay the end-lap tape on the fixing line, so the fixing passes through it.

The detail is enlarged. The tape is drawn to show where it goes, not its size.

## 5. Fixing

Fix through the centre of the pan, in every pan: six primary fixings per sheet, at every purlin. Never through a crown. Purlin spacing and fixing length: follow the project specification.

### A fixing in every pan, at every purlin

34/1000 box profile, forward (over purlin)
PVC Plastisol, Polyester

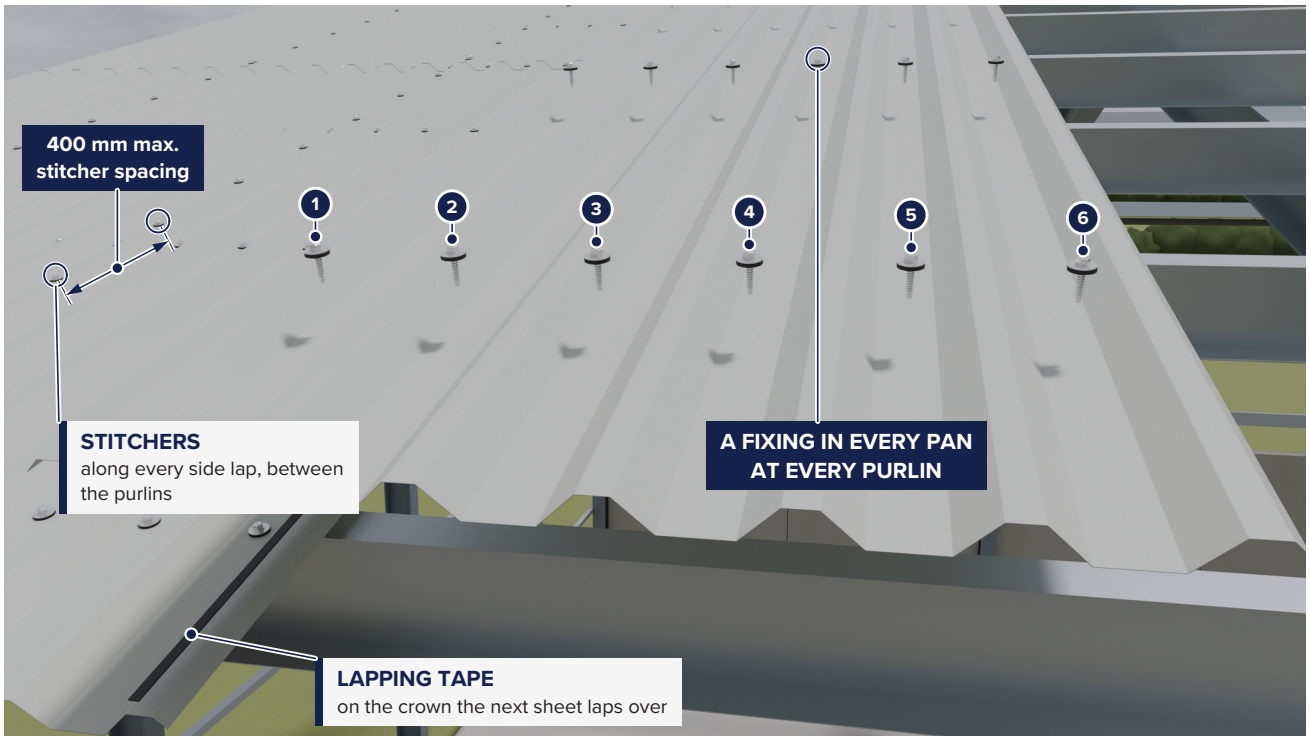


**Primary fixings: a fixing in every pan at every purlin, six to a sheet.**
The next sheet is shown lifted over its purlins, its fixings held above the pans they go through. Side laps are stitched between the purlins, 400 mm maximum apart.

Purlin spacing and fixing length: follow the project specification. The fixings are drawn larger than life so they read at print size. The tape is drawn lifted slightly clear of the sheet so it reads as a separate part.

### Stitchers

Stitch every side lap through the crown of the lapped corrugation at 400 mm maximum centres, along the full length of the lap, with 22 mm stitcher screws. Stitchers tie the two sheets to each other; they do not fix the sheet to the purlin.

- Where sheets are fixed to preservative-treated timber, put a PVC barrier tape on the purlin face first. The preservative attacks the coating from the back.
- Keep copper, lead and other dissimilar metals off the sheets and out of the run-off onto them. They corrode the coating where they touch it or wash over it.

### Setting a fixing

1. Set the fixing square to the sheet. Driven at an angle it cannot compress the washer evenly and will not seal on the low side.
2. Drive it until the washer is evenly compressed and just begins to extrude from under the head. Stop there.
3. Never force a sheet down onto a fixing. If it does not sit without persuasion the setting-out is wrong, and forcing it shows later as distortion.
4. Check the washers, fixing by fixing, while the access is still up. An over-driven and an under-driven fixing look the same from the ground and fail for opposite reasons; the washer is the only reliable check.

## Fix through the pan, never the crown

34/1000 box profile, forward (over purlin)
PVC Plastisol, Polyester

On a single skin box profile the sheet bears on the purlin at the pan, so that is where the fixing goes. A fixing in a crown has nothing under it but air: it cannot clamp, and it crushes the profile as it tightens.

**✓ CORRECT** Through the flat of the pan, into the purlin directly beneath it.

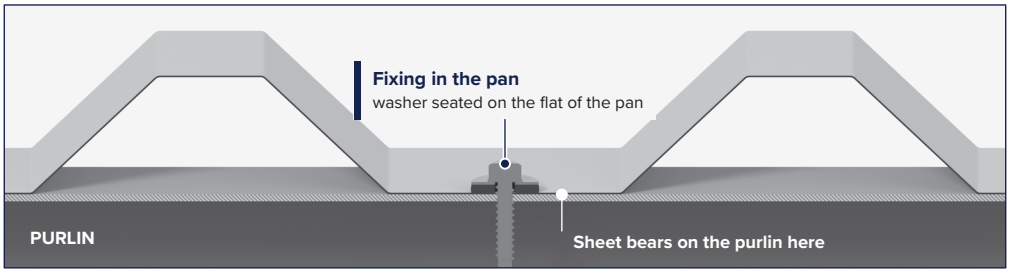


**✗ WRONG** Through the crown. The fastener spans a void and crushes the profile as it pulls down.

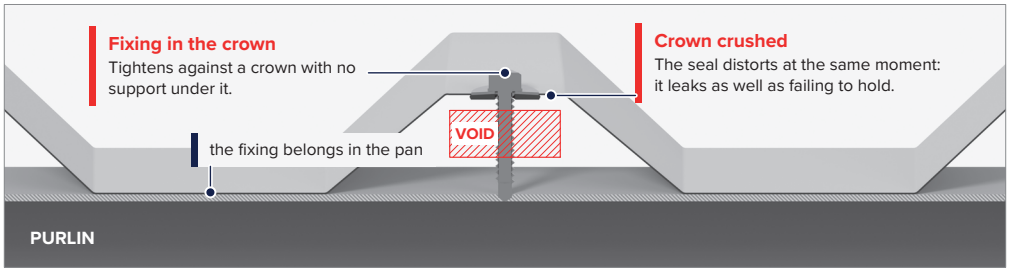


Primary fixings: a fixing in every pan at every purlin, six to a sheet. Purlin spacing and fixing length: follow the project specification. The crushed crown is drawn larger than life so it reads at print size.

## Drive the washer to the right point

34/1000 box profile, forward (over purlin)
PVC Plastisol, Polyester

The sealing washer tells you when to stop. Too little and it never seals; too much and you dish the sheet and lock it to the purlin.

**✗ UNDER**

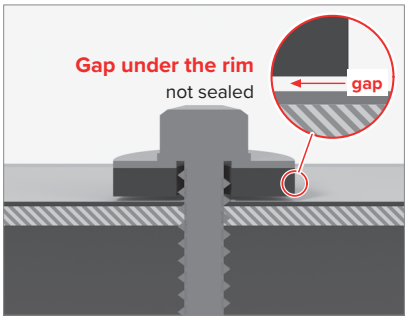


Washer at full thickness and standing off the sheet. Nothing is squeezed, so nothing is sealed - and the sheet is not held down either.

**✓ CORRECT**

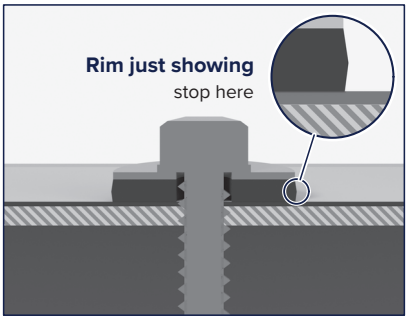


Evenly compressed all round and just beginning to extrude past the metal cap. That rim of squeezed rubber is the signal to stop.

**✗ OVER**

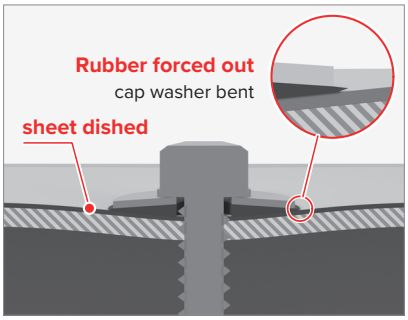


The sheet is dished and the seal distorted. The sheet is now locked to the purlin, so thermal movement is forced into the sheet instead of being taken up at the fixing.

Drawn to teach: the gap under the under-driven washer and the dish in the over-driven sheet are both drawn larger than life so they read at print size. The correct panel is drawn to scale.

## 6. Wall cladding

Where 34/1000 is fixed Reverse, as on the walls drawn in this section, the sheet is turned over: the narrow flats bear on the rails and the wide flats stand off them. Start at the end of the wall furthest from the prevailing wind and lay each vertical run from the bottom up, one run at a time. Side lap by one full corrugation and end lap by a minimum of 150 mm, the upper sheet always outside the one below.

## Wall cladding: the order of laying

34/1000 box profile, reverse (under purlin), wall
PVC Plastisol, Polyester

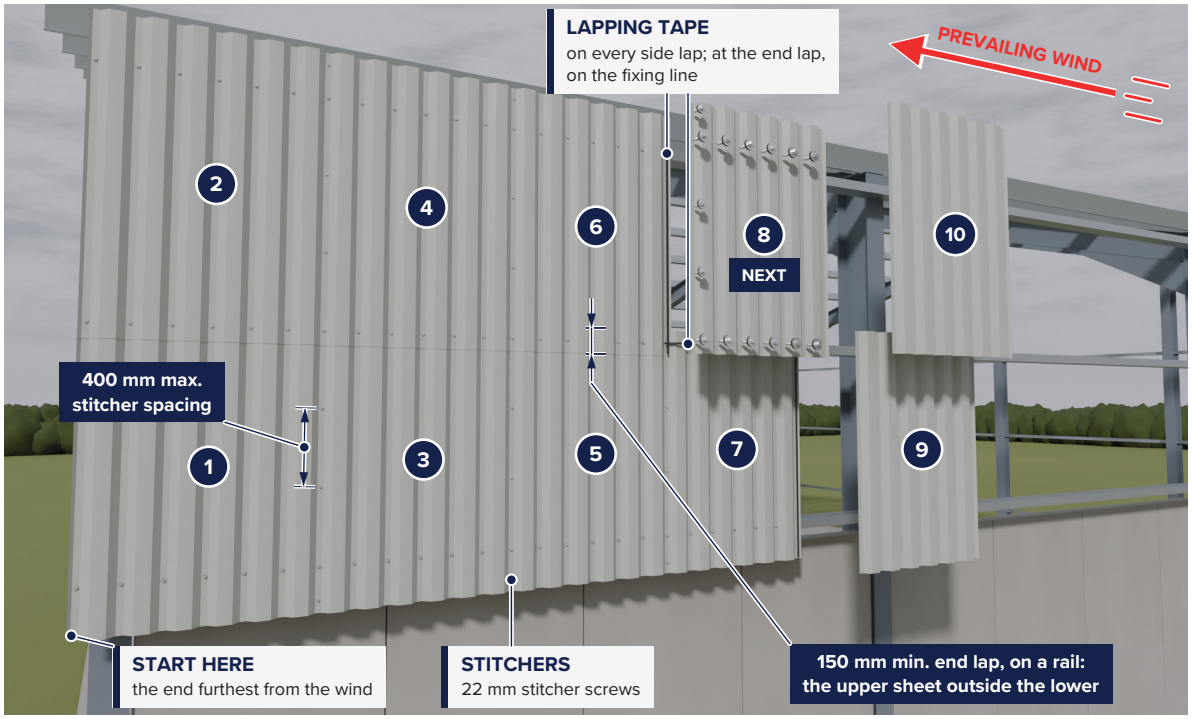


**Start at the end furthest from the prevailing wind, then lay each vertical run from the bottom up, one run at a time.**
Each upper sheet laps outside the one below it, 150 mm minimum, on a rail.

The fixings are drawn larger than life so they read at print size. The sheets not yet fixed are shown lifted over the place they go.

## Wall fixings: every trough, at every rail

34/1000 box profile, reverse (under purlin), wall
PVC Plastisol, Polyester




**Walls: a fixing through every trough at every rail, six to a sheet.**
The lap trough is fixed once, through both sheets; the sheet at the free edge, at the end of the wall, takes a seventh.

Rail spacing and fixing length: follow the project specification. The fixings are drawn larger than life so they read at print size.

Fix through the centre of every trough, the narrow flat that bears on the rail, at every rail: six fixings per sheet, with the lap trough fixed once, through both sheets. At the end of the wall, fix the last sheet through its free-edge trough as well, seven fixings on that sheet. Never through a wide flat standing off the rail. Stitch side laps with 22 mm stitcher screws at 400 mm maximum centres. Lay lapping tape in every side lap and every end lap. At an end lap the tape is one strip on the fixing line, and the fixing passes through it.

## 7. Finishing the edges

### Fillers

- The eaves filler goes UNDER the sheet and the ridge filler goes OVER it. They are not interchangeable: one fitted the wrong way up leaves a gap the length of the building.
- Run fillers continuously across the whole width of the sheeting and bed them to the sheet with a flexible, waterproof sealant. A gap in a filler is a hole for wind-driven rain, birds and vermin.

### Flashings, ridge and barge

- Where flashings join or lap one another, and at ridge and barge, lap them by a minimum of 150 mm.
- Fix flashings with 22 mm stitcher screws at 400 mm maximum centres, the same maximum as the side-lap stitchers.
- Lay ridge flashings from the end of the roof away from the prevailing wind, the same as the sheets.

## Which way up the filler goes

34/1000 box profile, forward (over purlin)
PVC Plastisol, Polyester

**AT THE EAVES**

filler goes UNDER the sheet

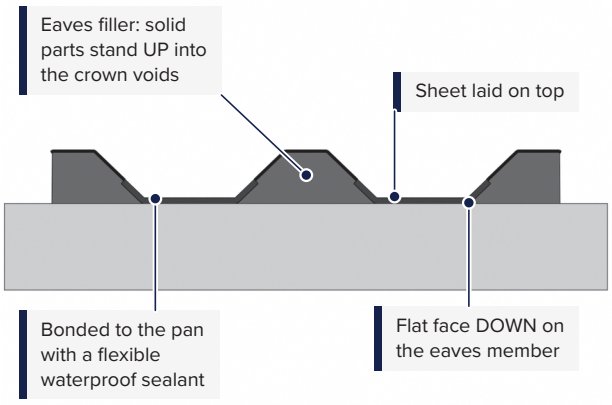


**Laid in this order**

1. eaves member
2. eaves filler
3. sheet

**AT THE RIDGE**

filler goes OVER the sheet

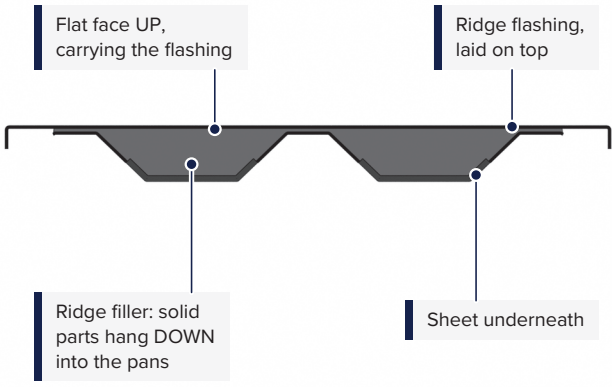


**Laid in this order**

1. sheet
2. ridge filler
3. ridge flashing

**Same sheet, same filler family, opposite way up.**
Both fillers are continuous over the entire sheet width. Section through two pitches, same scale both sides. Profile height 34 mm, cover width 1000 mm, seven crowns at 167 mm.